| REV. | ECN. NO. | APPD. |
|---|---|---|
| A | / | pcy |
| A1 | / | LJF |

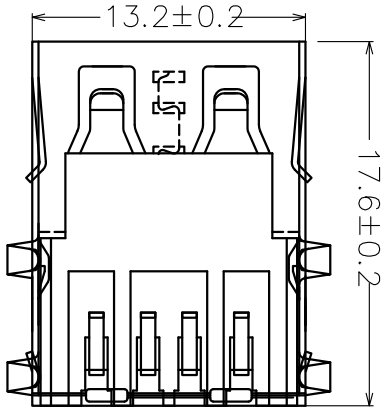


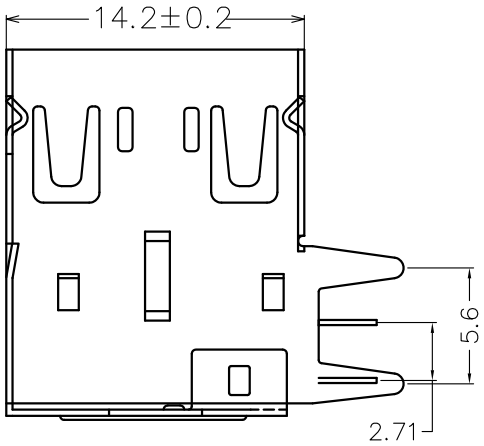


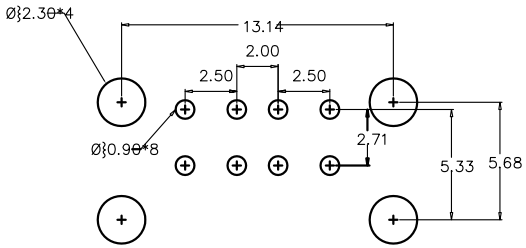


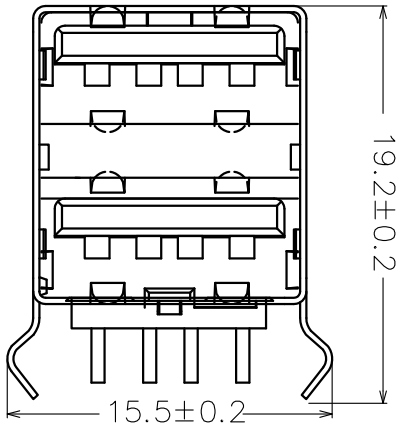


NOTES:

1.MATERIAL:
- 1.1 Housing:thermoplastic plastics
- 1.2 terminals:Copper Alloy
  - Gold plated in contact area:
  - Tin plated in termination
  - Nickel Plated overall
- 1.3 Shell:Steel&Copper Alloy
  - Nickel Plated overall

2.ELECTRICAL CHARACTERISTICS:
- 2.1 Rating Current :1.5 Ampere
- 2.2 Rating Voltage :30 V Max
- 2.3 Contact Resistance:30 Milli ohms
- 2.4 Insulation Resistance:1000 Mega ohms Min.

3.MECHANICAL CHARACTERISTICS:
- 3.1 Connector Mating force: 35N MAX(3.57Kgf)
- 3.2 Connector Unmating force:10N min(1.02Kgf)
- 3.3 Durability:1500Cycles.

4.ENVIRONMENT CHARACTERISTICS:
- 4.1 Operating temperature:-0℃ to +50℃
- 4.2 Storage temperature:-20℃ to +60℃

U221-313X- XXXOX7

- 1:Iron alloy Ni plating
- G:Au G/Fu"
- 2:PBT
- 2:White
- 1:tray

| | | | | | | |
|---|---|---|---|---|---|---|
| TOLERANCE UNLESS OTHERWISE SPECIFIED<br>.XXX ±0.10<br>.XX ±0.20<br>.X ±0.30<br>.X° ±3°<br>.XX° ±2° | | HLW 深圳市华联威电子科技有限公司<br>HUA LIAN WEI TECHNOLOGY ELECTRONICS CO;LTD. | | | | |
| APPROVED | | PART NAME: | USB A/F 双层90度短体13.1 | | | |
| CHECKED | | PART No: | U221-3131-G22017 | | | C |
| DRAWED | Lijinfeng | PROJECTION: | UNIT: | SCALE | SHEET | REV. |
| DATE | 2021.08.03 | | mm | 1:1 | 1OF1 | A1 |