REV.	ECN.NO.	APPD.
A1	EXXXXXXXXXX	yangguifeng

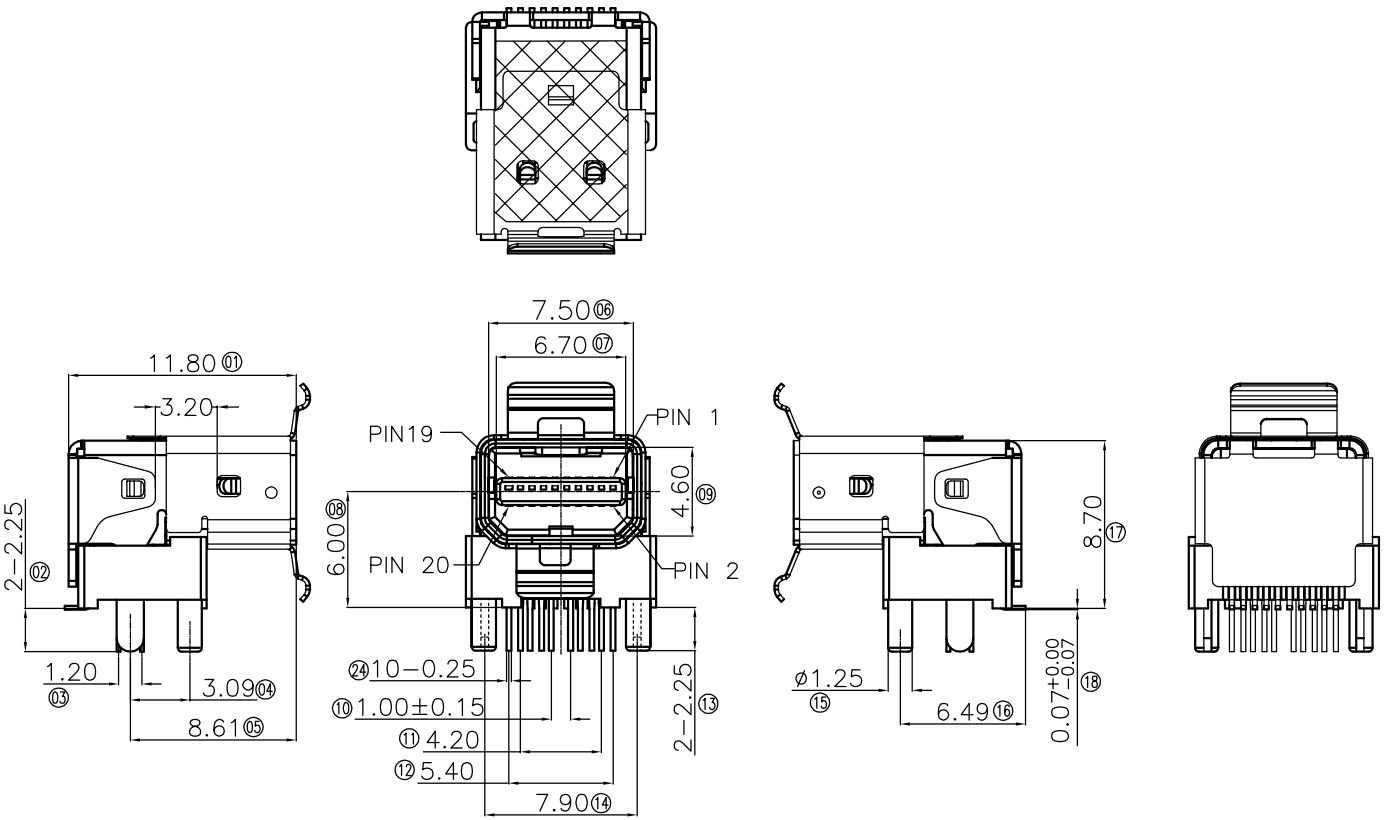

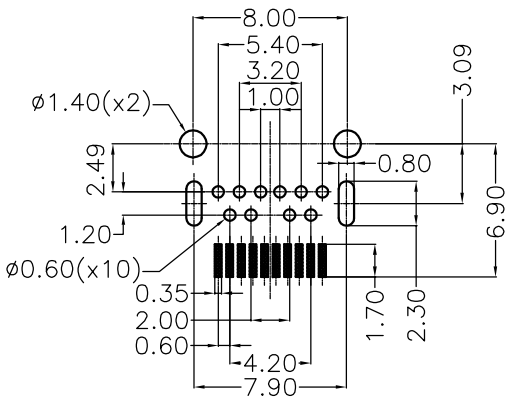

P.C.B LAYOUT (T=1.60mm)

VIEW BOTTOM(tolerance±0.05)

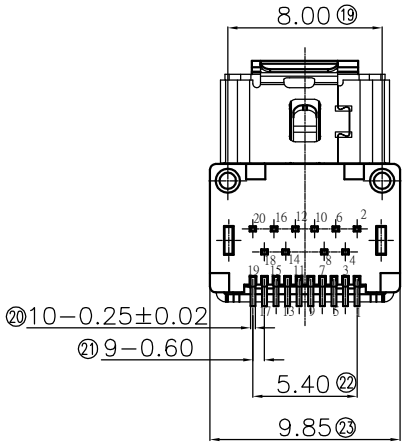

DP13-0115-16191

- 5: 铜壳镀镍
- 1: 半金1u”
- 6: LCP
- 1: 黑色
- 9: 载带+贴麦拉
- 1: RoHS 防火

NOTES:

1. MATERIL

1.1 HOUSING:Hi-TEMP PLASTIC (UL94-V-0),BLACK

1.2 CONTACT:COPPER ALLOY(T=0.20),
PLATING:GOLD PLATED ON CONTACT AREA,
TIN PLATED ON SOLDER TAILS,UNDER
NICKEL PLATED.

1.3 SHELL:BRASS(T=0.40),PLATING:NICKEL PLATED,

1.4 SPRING SHELL: STAINLESS SUS304 T=0.20mm

1.5 COVER: HI-TEMP,PLASTIC(UL94V-0)BLACK,

2. SPECIFICATION:

2.1 CURRENT RATING: 0.5 A

2.2 CONTACT RESISTANCE: 30mΩ MAX.

2.3 DIELECTRIC WITHSTANDING VOLTAGE: 500V AC R.M.S FOR ONE MINUTE.

2.4 INSULATION RESISTANCE: 100MΩ MIN AT 500V DC.

2.5 OPERATING TEMPERATURE: -25° TO +85°.

2.6 DURABILITY: 10000 CYCLES.

2.7 MATING FORCE: 4.5KG MAX.

2.8 UNMATING FORCE: 1.0KG MIN

TOLERANCE UNLESS OTHERWISE SPECIFIED		HLW 深圳市华联威电子科技有限公司 HUA LIAN WEI TECHNOLOGY ELECTRONICS CO;LTD.				
.XXX ±0.10 .XX ±0.20 .X ±0.30	.X° ±3° .XX° ±2°					
APPROVED		PART NAME:	mini Displayport母20PIN SMT式			
CHECKED		PART No:	DP13-0115-16191			C
DRAWED	yangguifeng	PROJECTION:	UNIT:	SCALE	SHEET	REV.
DATE	2022.08.18		mm	1:1	1 OF 1	A1