REV.	ECN.NO.	APPD.
A	EXXXXXXXXXX	chenyiting

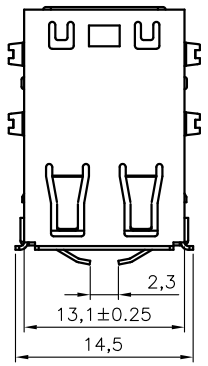

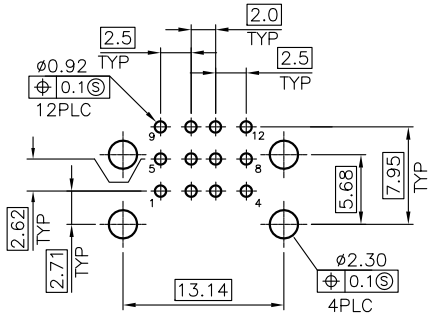

RECOMMENDED P.C.B LAYOUT

TOLERANCE: ±0.05

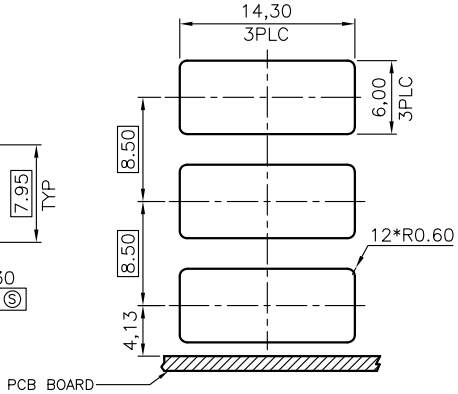

MOUNTING PANEL CUTOUT

NOTES:

1.MATERIAL:

1.1 Housing:thermoplastic plastics

1.2 terminals:Copper Alloy

Gold plated in contact area:

Tin plated in termination

Nickel Plated overall

1.3 Shell:Steel&Copper Alloy

Nickel Plated overall

2.ELECTRICAL CHARACTERISTICS:

2.1 Rating Current :1.5 Ampere

2.2 Rating Voltage :30 V Max

2.3 Contact Resistance:30 Milli ohms

2.4 Insulation Resistance:1000 Mega ohms Min.

3.MECHANICAL CHARACTERISTICS:

3.1 Connector Mating force: 35N MAX(3.57Kgf)

3.2 Connector Unmating force:10N min(1.02Kgf)

3.3 Durability:1500Cycles.

4.ENVIRONMENT CHARACTERISTICS:

4.1 Operating temperature:-0℃ to +50℃

4.2 Storage temperature:-20℃ to +60℃

U221-8021-G41911

1:吸塑盒

1:吸塑盒

1:吸塑盒

1:吸塑盒

1:吸塑盒

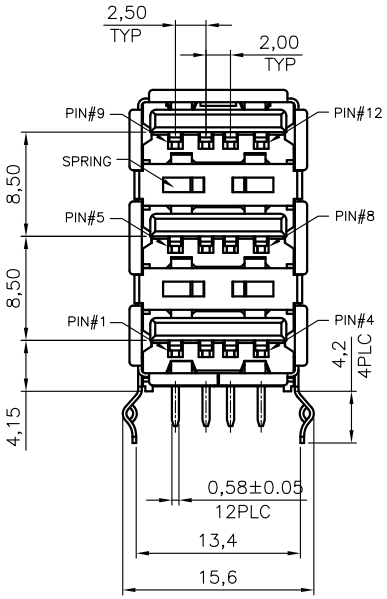

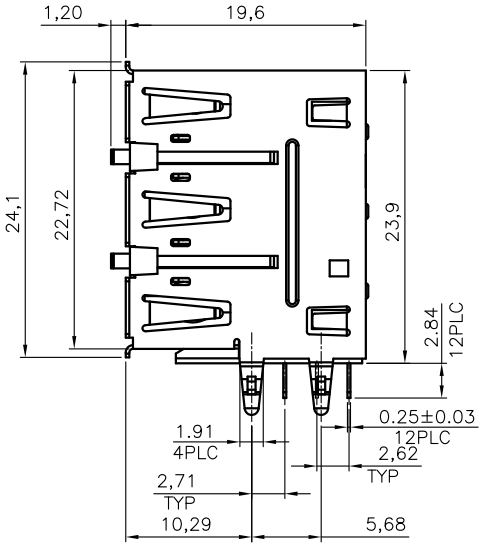

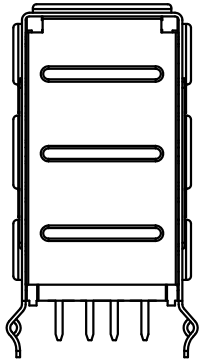

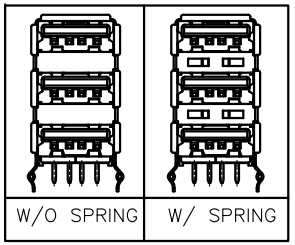

TOLERANCE UNLESS OTHERWISE SPECIFIED		HLW 深圳市华联威电子科技有限公司 HUA LIAN WEI TECHNOLOGY ELECTRONICS CO;LTD.				
.XXX ±0.10 .XX ±0.20 .X ±0.30	.X° ±3° .XX° ±2°					
APPROVED		PART NAME:	USB 2.0 AF 三层结构			
CHECKED		PART No:	U221-8021-G41911			C
DRAWED	chenyiting	PROJECTION:	UNIT:	SCALE	SHEET	REV.
DATE	2022.05.26		mm	1:1	1OF1	A