REV.	ECN.NO.	APPD.
A	EXXXXXXXXXX	yangguifeng

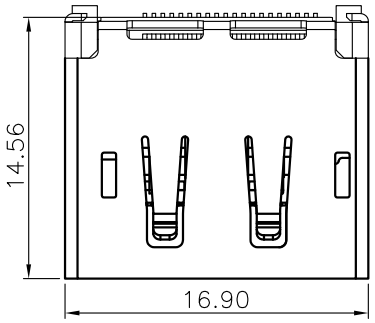

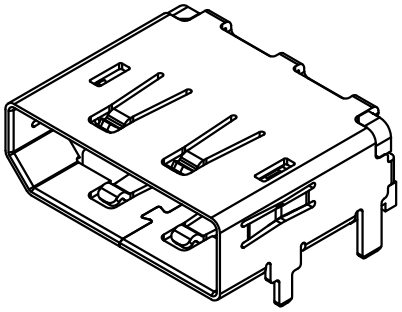

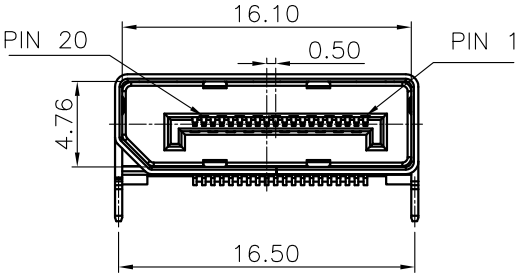

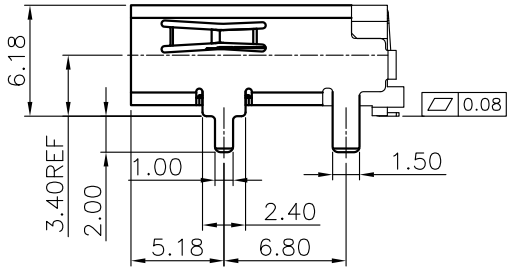

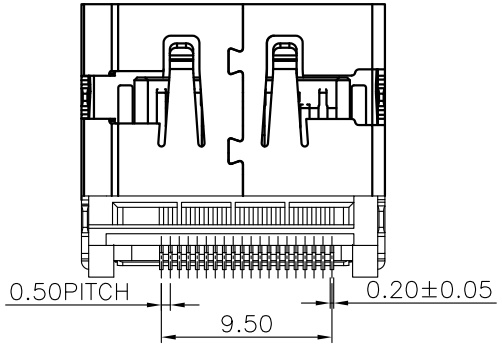

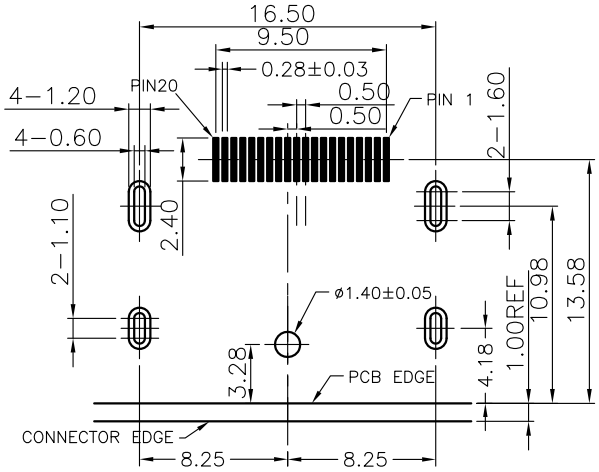

RECOMMENDED P.C.B LAYOUT(PCB THICKNESS: 1.6mm)
COMPONENT SIDE VIEW(TOLERANCE: ±0.05)

NOTES:

1. SPECIFICATION:
1.1 CURRENT RATING: 0.5 A
1.2 CONTACT RESISTANCE: 30mΩ MAX.
1.3 DIELECTRIC WITHSTANDING VOLTAGE: 500V AC R.M.S FOR ONE MINUTE.
1.4 INSULATION RESISTANCE: 100MΩ MIN AT 500V DC.
1.5 OPERATING TEMPERATURE: −25° TO +85°.
1.6 DURABILITY: 10000 CYCLES.
1.7 MATING FORCE: 4.5KG MAX.
1.8 UNMATING FORCE: 1.0KG MIN

DP13-0515-G61038

5:铜壳镀镍
G:半金G/Fu"
6:LCP
1:黑色
3:载带

TOLERANCE UNLESS OTHERWISE SPECIFIED		HLW 深圳市华联威电子科技有限公司 HUA LIAN WEI TECHNOLOGY ELECTRONICS CO;LTD.				
.XXX ±0.10 .XX ±0.20 .X ±0.30	.X° ±3° .XX° ±2°					
APPROVED		PART NAME:	DP 20P四脚插 SMT 无定位柱			
CHECKED		PART No:	DP13-0515-G61038			C
DRAWED	yangguifeng	PROJECTION:	UNIT:	SCALE	SHEET	REV.
DATE	2021.12.01		mm	1:1	1 OF 1	A