REV.	ECN.NO.	APPD.
A	/	pcy

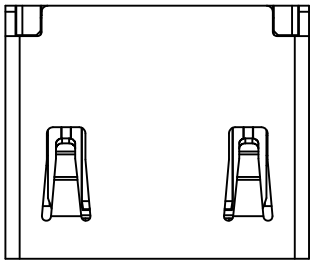

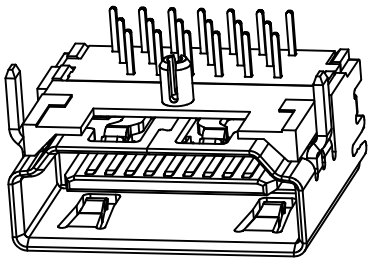

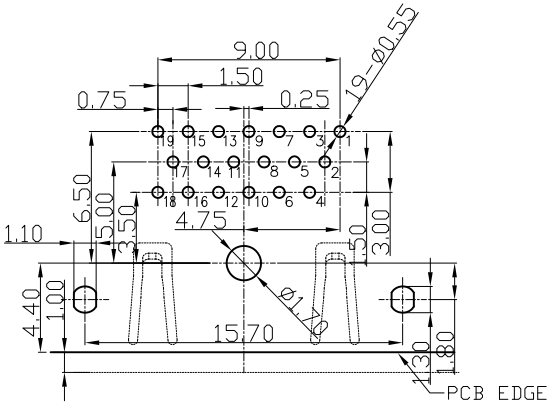

RECOMMENDED PCB LAYOUT (TOP VIEW)
TOLERANCE FOR PCB LAYOUT IS ±0.05

NOTES:

1. MATERIAL:
   - 1.1 Housing: thermoplastic plastics
   - 1.2 terminals: Copper Alloy
     Gold plated in contact area:
     Tin plated in termination
     Nickel Plated overall
   - 1.3 Shell: Steel&Copper Alloy
     Nickel/Au Plated overall
2. ELECTRICAL CHARACTERISTICS:
   - 2.1 Rating Current : 0.5 Ampere
   - 2.2 Rating Voltage : 40 V Max
   - 2.3 Contact Resistance: 30 Milli ohms
   - 2.4 Insulation Resistance: 100 Mega ohms Min.
3. MECHANICAL CHARACTERISTICS:
   - 3.1 Connector Mating force: 4.5kg MAX
   - 3.2 Connector Unmating force: 1.0Kg min
   - 3.3 Durability: 10000Cycles.
4. ENVIRONMENT CHARACTERISTICS:
   - 4.1 Operating temperature: -20℃ to +85℃
   - 4.2 Storage temperature: -20℃ to +65℃

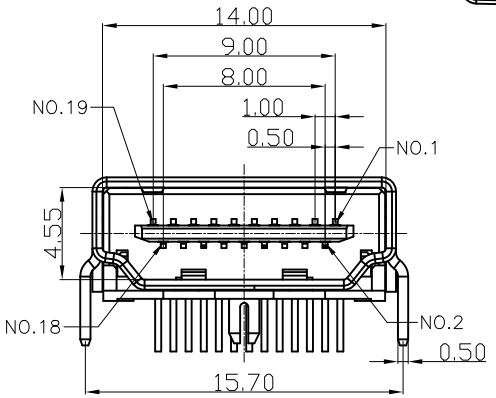

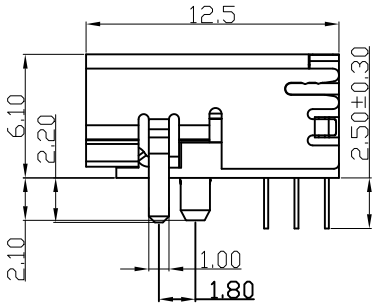

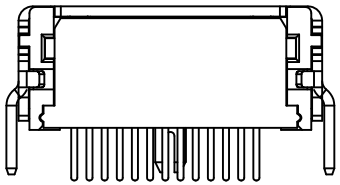

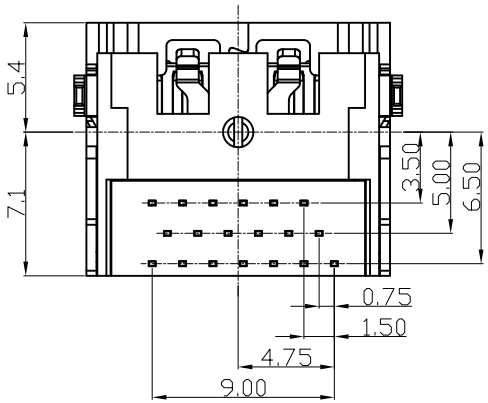

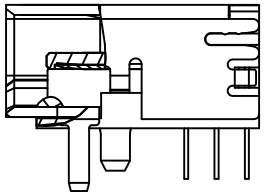

HD23-011X-XXX0X1

- 1:Iron alloy Ni plating
- 5:Copper alloy Ni plating
- 4:Iron alloy Au plating
- 8:Copper alloy Au plating
- 1:Au 1u", 3:Au 3u"
- 5:Au 5u", 7:Au 10u'
- 8:Au 15u", A:Au 30u"
- 1:tray
- 2:Tube
- 8:Tape&Reel
- 9:Tape&Reel+Mylar
- 1:Black
- 5:PA9T
- 2:PBT
- 6:LCP

TOLERANCE UNLESS OTHERWISE SPECIFIED		HLW 深圳市华联威电子科技有限公司 HUA LIAN WEI TECHNOLOGY ELECTRONICS CO;LTD.				
.XXX ±0.10 .XX ±0.20 .X ±0.30	.X° ±3° .XX° ±2°					
APPROVED		PART NAME:	HDMI 19P/F 三排90度 无耳			
CHECKED		PART No:	HD23-011X-XXX0X1			C
DRAWED	pengchaoyong	PROJECTION:	UNIT:	SCALE	SHEET	REV.
DATE	2014.12.2		mm	1:1	1 OF 1	A